WINAM GROUP

NF9054

DATUM: 3.10.2003

PLAY

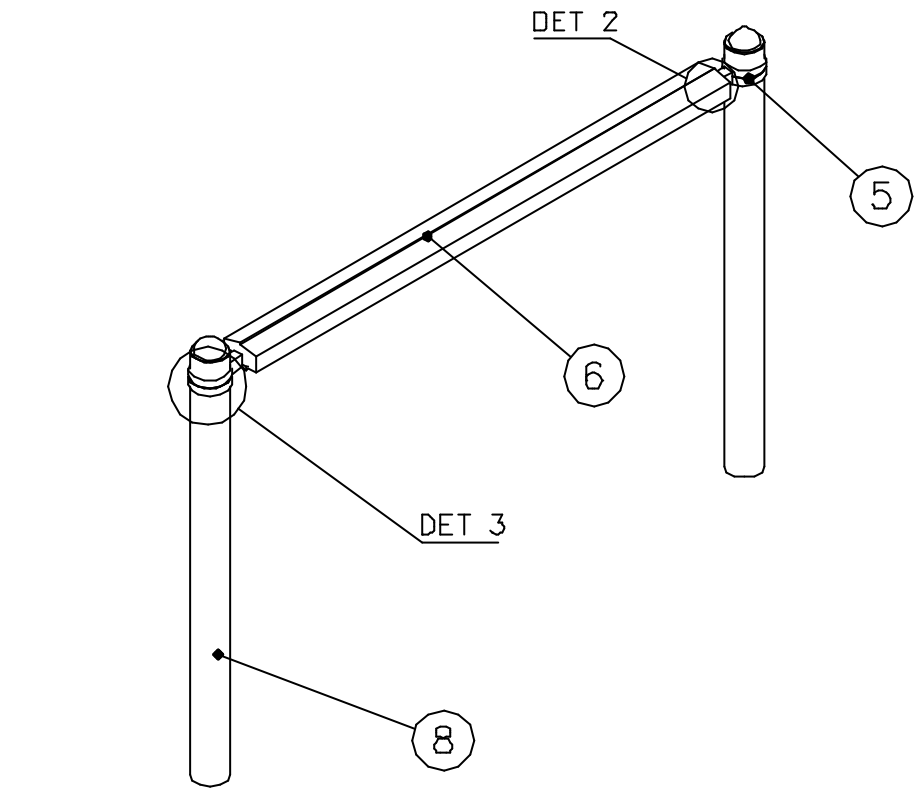

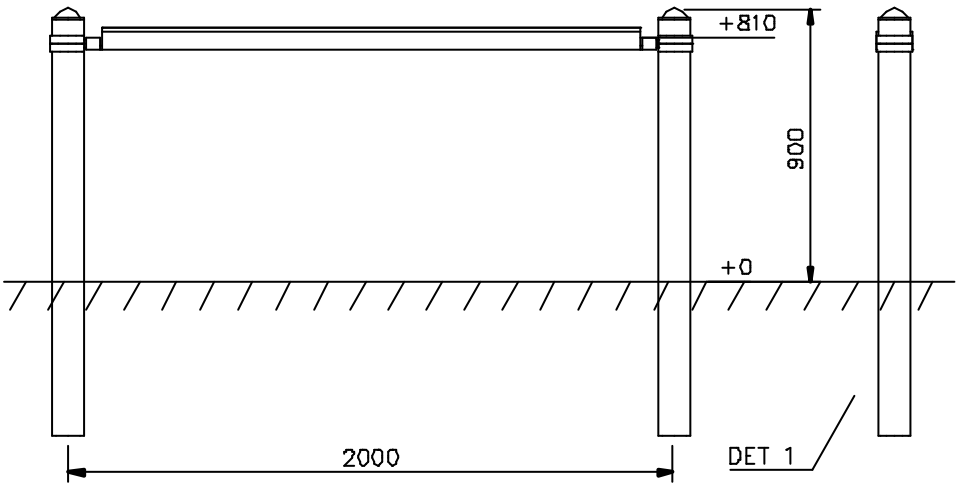

		ST
1	N00106 8x20	2
2	N00126 M6x16	2
3	N01812 8x12	2
4	N03816 8,4x16x1,5	4
5	N90009	2
6	N90007 N90006	1
6	N00107	1
8	N90001	2

DET 1

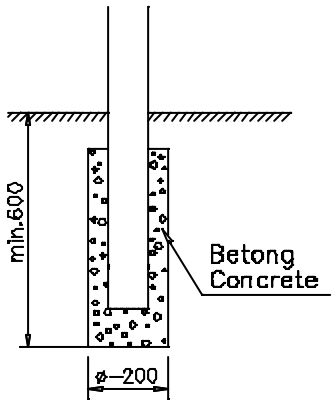

DET 2

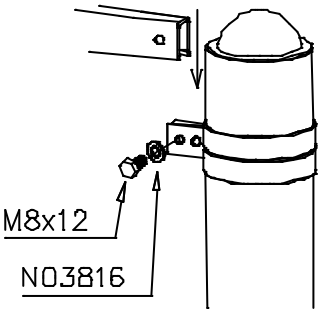
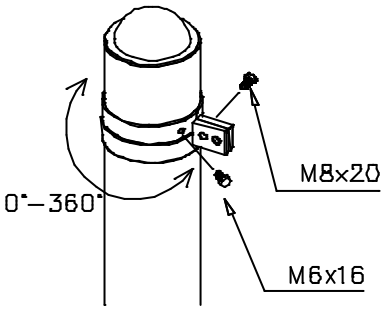
DET 3