WINAM GROUP

104610M

Flower Table

Beautiful play table shaped like a flower is suitable for sand play.

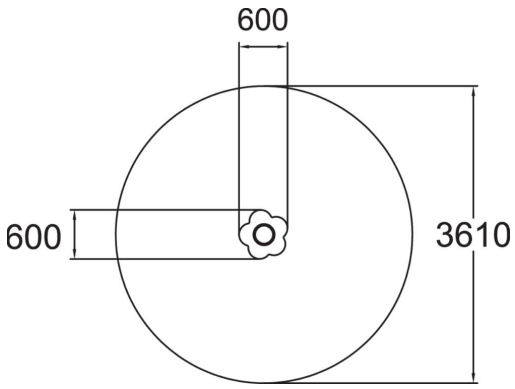

User age	1+
Product length, mm	600
Product width, mm	600
Product height, mm	320
Falling space, m²	10.2
Height required, mm	2120
Max. free fall height, mm	320
Safety info	EN 1176-1 TÜV
Installation time (for 1), H	1.5
Foundation options	Deep mounting Surface mounting
Colour of walls and HPL	

WINAM GROUP LTD
Room 101, 226/4A Le Trong Tan, Tay Thanh Ward, Tan Phu District, Ho Chi Minh City, Viet Nam
(028) 22 494 333
info@playground.com.vn | www.playground.com.vn

© WinAm Group Ltd. All Rights Reserved.